LEGEND

- ELECTRICAL SERVICES SWITCHBOARD.
- SWITCHBOARD / CONTROL PANEL NOT PROVIDED AS PART OF THE ELECTRICAL SUBCONTRACT.
- SINGLE POWER OUTLET.
- DOUBLE POWER OUTLET.
- USB — DOUBLE POWER OUTLET, C/W INTEGRAL USB.
- SPECIAL PURPOSE OUTLET.
- ELECTRICAL CONNECTION AS NOTED.
- SIGNAGE CONNECTION.
- SPx — LIGHTING CONTROL SWITCHPANEL, TYPE x.
- ONE-WAY LIGHT SWITCH.
- TWO-WAY LIGHT SWITCH.
- CIRCUIT LINE.
- SWITCH LINE.
- DB-x - Py — POWER CIRCUIT DESIGNATION. DENOTES DB AND CIRCUIT.
- xx — LIGHTING CONTROL CHANNEL REFERENCE.
- ELECTRICAL EQUIPMENT AS NOTED.
- REFER TO DETAIL NOTED FOR THE AREA SHOWN HATCHED. ADDITIONAL OUTLETS & FITTINGS MAY BE SHOWN ON DETAIL.
- Sx — Sx: LED JOINERY / CEILING STRIP LIGHT, TYPE AS NOTED.
- E1 — E1: GENERAL CEILING RECESSED LED EMERGENCY LIGHT, WHITE.
- E2 — E2: GENERAL CEILING RECESSED LED EMERGENCY LIGHT, BLACK.
- EX — EX: EMERGENCY LED EXIT LIGHT, WHITE.
- BK EX — EX BK: EMERGENCY LED EXIT LIGHT, BLACK.
- PD01 — PD01: DECORATIVE SUSPENDED PENDANT.
- PD02 — PD02: DECORATIVE SUSPENDED PENDANT.
- PD03 — PD03: DECORATIVE SUSPENDED PENDANT.
- PD04 — PD04: DECORATIVE SUSPENDED PENDANT.
- PD05 — PD05: DECORATIVE SUSPENDED PENDANT.
- PD06 — PD06: DECORATIVE SUSPENDED PENDANT.
- PD07: NO LONGER REQUIRED.
- WL01 — WL01: DECORATIVE WALL LIGHT, BRASS.
- RD01 — RD01: RECESSED DOWNLIGHT, BLACK.
- RD02 — RD02: RECESSED ADJUSTABLE DOWNLIGHT, BLACK.
- RD03 — RD03: RECESSED DOWNLIGHT TO MATCH EXISTING RDE FITTING.
- RD04 — RD04: RECESSED DOWNLIGHT, WHITE.
- RDE — RDE: EXISTING RECESSED DOWNLIGHT TO BE RETAINED.
- SLE — SLE: EXISTING SURFACE BATTEN LIGHT TO BE RETAINED.
- FS01 — FS01: FESTOON LIGHTING ON STAINLESS STEEL CABLE SUPPORT.
- HRE — HRE: EXISTING HEATER TO BE RETAINED.

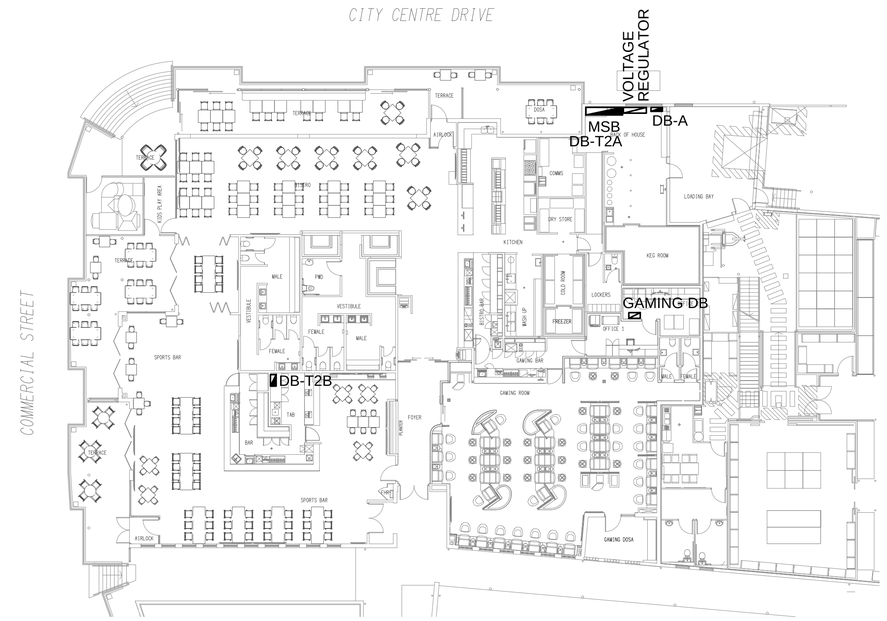

SITE PLAN

ELECTRICAL SWITCHBOARD LOCATIONS

SCALE 1:200

EQUIPMENT:

TEST - TEST PUSH BUTTON MOUNTED ON THE DISTRIBUTION BOARD ESCUTCHEON.

RESET - RESET PUSH BUTTON MOUNTED ON THE DISTRIBUTION BOARD ESCUTCHEON.

LAMP - AMBER TEST INDICATING LAMP MOUNTED ON THE DISTRIBUTION BOARD ESCUTCHEON.

Ta - ADJUSTABLE 0-3 HOUR TIMED RELAY.

Tb - 15 MINUTE RUN-ON TIMER TO OPERATE UPON THE RETURN OF MAINS POWER.

Cx - CONTACTOR x.

CRx - CONTROL RELAY x.

Rx - RELAY x.

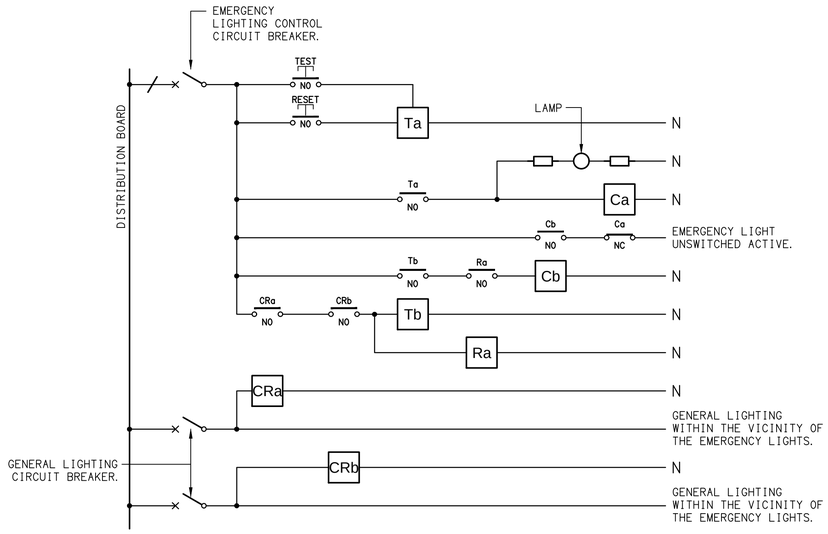

SCHEMATIC

EMERGENCY LIGHTING

NOT TO SCALE

NOTES

1. THE EMERGENCY LIGHT UNSWITCHED ACTIVE / GENERAL LIGHTING SWITCHED ACTIVE CIRCUIT ARRANGEMENT AND CONTROL IS TYPICAL FOR ALL CIRCUITS SUPPLYING EMERGENCY LIGHTS.

2. PROVIDE ADDITIONAL CONTROL RELAYS (CRx) CONFIGURED AS PER CRa AND CRb FOR ALL ADDITIONAL LIGHTING CIRCUITS THAT SUPPLY LIGHTS IN THE VICINITY OF THE EMERGENCY LIGHTS.

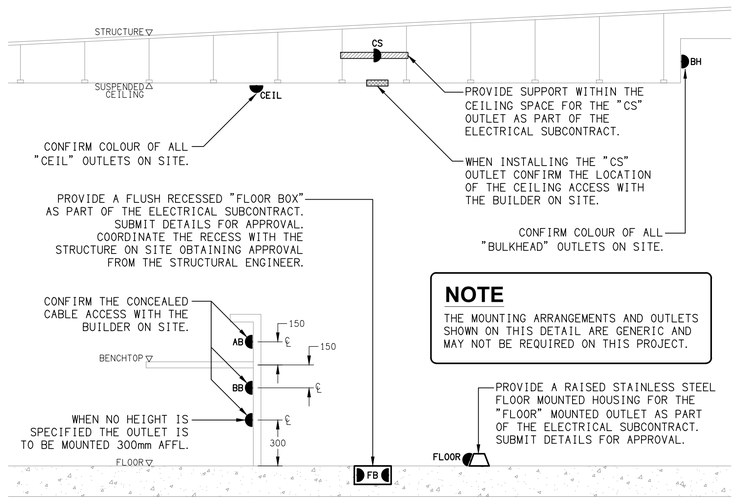

NOTE

THE MOUNTING ARRANGEMENTS AND OUTLETS SHOWN ON THIS DETAIL ARE GENERIC AND MAY NOT BE REQUIRED ON THIS PROJECT.

DETAIL

TYPICAL OUTLET MOUNTINGS

NOT TO SCALE

REV:	DESCRIPTION:	DATE:
B	CONSTRUCTION	05/08/2026

ELECTRICAL DESIGN GROUP BRISBANE PTY LTD
ACN 092 710 793

TRADING AS:
ELECTRICAL DESIGN GROUP

THE COPYRIGHT OF THIS DRAWING REMAINS THE PROPERTY OF THE ELECTRICAL DESIGN GROUP.

USE FIGURED DIMENSIONS IN PREFERENCE TO SCALE.

ALL DIMENSIONS TO BE VERIFIED ONSITE.

ELECTRICAL DESIGN GROUP
ELECTRICAL BUILDING SERVICES CONSULTANTS
BRISBANE GOLD COAST
P.O.Box 15, Sherwood Q.4075
Phone: (07) 3278 4375
Email: brisbane@edg.net.au
Web: www.edg.net.au

PROJECT:
COOMERA TAVERN

2 CITY CENTRE DRIVE, UPPER COOMERA, QUEENSLAND

DRAWING:
ELECTRICAL SERVICES
LEGEND & DETAILS

SCALE: AS SHOWN AT A1

PROJECT NO:	DRAWING NO:	REVISION:
C3734a	E01	B